Gear

Spare part list

61386 i / 42

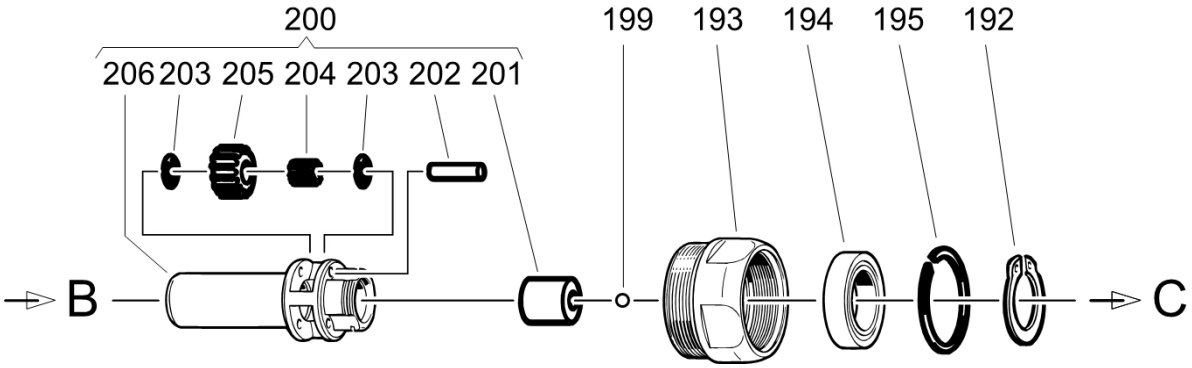

Parts without ordering number are not delivered separately for technical reasons. The use of other than genuine Atlas Copco replacement parts may result in decreased tool performance and increased maintenance and may, at the company option, invalidate all warranties.

© Atlas Copco Industrial Technique AB

参考编号	订购号	Qty	说明	Remark / included in Service kit
192		1	Lock ring	零件包含在套件中 4081027190 Service kit, 4081032290 Service kit, 4110168793 Quick release kit, 4110168794 Quick release kit, 4110168796 Quick release kit, 4110168795 Quick release kit, 4110202196 Quick release compl., 4110168798 Quick release kit, 4110168797 Quick release kit SW 20
193		1	Nut	
194		1	Ball bearing	61804
195	0335351801	1	Circlip	零件包含在套件中 4220117992 Front part, compl., 4220117491 Sleeve, compl., 4220405490 Front part, compl., 4220405690 Front part, compl., 4220117991 Front part, compl., 4220356692 Front part, compl., 4220356690 Front part, compl., 4220405590 Front part, compl., 4220117490 Sleeve, compl., 4220356693 Front part, compl., 4220356691 Front part, compl. BR 32

Parts without ordering number are not delivered separately for technical reasons. The use of other than genuine Atlas Copco replacement parts may result in decreased tool performance and increased maintenance and may, at the company option, invalidate all warranties.

© Atlas Copco Industrial Technique AB

参考编号	订购号	Qty	说明	Remark / included in Service kit
199	0517110600	1	Ball	零件包含在套件中 4081005190 Service kit, 4081005590 Small part kit, 4081007090 Service kit, 4081007390 Service kit, 4081007490 Service kit, 4081007590 Service kit, 4081007790 Service kit, 4081007890 Service kit, 4081008690 Service kit, 4081015990 Service kit, 4081019690 Service kit, 4081019790 Service kit, 4081019990 Service kit, 4081023690 Service kit, 4081025490 Service kit, 4081027090 Service kit, 4081027590 Service kit, 4081028290 Service kit, 4081028490 Service kit, 4081028590 Service kit, 4081028990 Service kit, 4081029190 Service kit, 4081029590 Service kit, 4081029690 Service kit, 4081035490 Service kit, 4082001290 Small part kit, 4082003290 Small part kit - Angle head, 4082006290 Small part kit - Angle head, 4082008290 Small part kit - Angle head, 4082017190 Small parts kit - Angle head, 4216023090 Service kit, ball, 4081029290 Service kit, 4081205190 Service kit, 4081024790 Service kit, 4082017890 Wear part kit - Pulse unit, 4082018190 Wear part kit - Angle head, 4082021790 Wear part kit - Angle head, 4081201590 Service kit, 4082026091 Maintenance kit - Front part, 4081028190 Service kit, 4081053190 Wear part kit - Pulse Unit, 4082026816 Wear part kit - Angle head, 4082026817 Wear part kit - Angle head, 4082026728 Wear part kit - Angle head, 4082021690 Wear part kit - Angle head, 4216020790 Gear, compl., 4216020990 Gear, compl., 4210360184 Angle head, compl., 4210231797 Clutch jaw, compl., 4210231795 Clutch jaw, compl., 4210231790 Clutch jaw, compl., 4220359591 Angle head, compl., 4220359592 Angle head, compl., 4210231794 Clutch jaw, compl., 4210231793 Clutch jaw, compl., 4210231796 Clutch jaw, compl., 4210334289 Angle head, compl., 4210360187 Angle head, compl., 4220083795 Angle gear, compl., 4112016990 Ratchet set, 4250180682 Pulse unit, 4250180683 Pulse unit, 4250180680 Pulse unit, 4250180681 Pulse unit, 4250180665 Pulse unit, 4250180666 Pulse unit, 4250180664 Pulse unit, 4250252082 Pulse unit, compl., 4250180669 Pulse unit, 4250252086 Pulse unit, compl., 4250252085 Pulse unit, compl., 4250253986 Pulse unit, compl., 4250253985 Pulse unit, compl., 4250242786 Pulse unit, compl., 4250242785 Pulse unit, compl., 4250242790 Pulse unit, compl., 4250242789 Pulse unit, compl., 4210183883 Angle head, compl., 4210334284 Angle head, compl., 4210360181 Angle head, compl., 4210334285 Angle head, compl., 4210248486 Angle head, compl., 4220097793 Angle gear, compl., 4210360191 Angle head, compl., 4220083798 Angle gear, compl., 4210360193 Angle head, compl., 4210360195 Angle head, compl., 4220083796 Angle gear, compl., 4210360183 Angle head, compl., 4220083791 Angle gear, compl., 4210334691 Angle gear, compl., 4210360185 Angle head, compl., 4220083793 Angle gear, compl., 4210334286 Angle head, compl., 4210334780 Angle gear, compl., 4210334283 Angle head, compl., 4210393481 Angle head, compl., 4210274890 Angle gear, compl., 4210248485 Angle head, compl., 4210248992 Angle gear, compl., 4210183482 Clutch, compl., 4210360160 Angle head, compl., 4210360161 Angle head, compl., 4210248493 Angle head, compl., 4210442181 Angle head, compl., 4210334692 Angle gear, compl., 4210249091 Angle gear, compl., 4210360166 Angle head, compl., 4210442081 Angle head, compl., 4210334696 Angle gear, compl., 4210248481 Angle head, compl., 4210360164 Angle head, compl., 4210246394 Angle gear, compl., 4210360163 Angle head, compl., 4210246391 Angle gear, compl., 4210248496 Angle head, compl., 4210248497 Angle head, compl., 4210360162 Angle head, compl., 4210248498 Angle head, compl., 4210442182 Angle head, compl., 4210284480 Spindle unit, compl., 4220132491 Planetary gear, compl., 4220181998 Angle head, compl., 4220158985 Angle gear, compl., 4220158988 Angle gear, compl., 4220181997 Angle head, compl., 4220364990 Angle gear, compl., 4220181999 Angle head, compl., 4220182092 Angle head, compl., 4220182091 Angle head, compl., 4220242297 Angle head, compl., 4220111992 Planetary gear, compl., 4220359594 Angle head, compl., 4220353694 Angle head, compl., 4220359693 Angle head, compl., 4220359692 Angle gear, 4220359694 Angle head, compl., 4220359792 Angle head, compl., 4220242298 Angle head, compl., 4220242291 Angle head, compl., 4220242292 Angle head, compl., 4220242293 Angle head, compl., 4220385992 Angle head, compl., 4220385993 Angle head, compl., 4220385990 Angle head, compl., 4220223893 Angle head, compl., 4220245792 Angle head, compl., 4220087396 Angle head, compl., 4220385997 Angle head, compl., 4220242290 Angle head, compl., 4220385998 Angle head, compl., 4220242260 Angle head, compl., 4220242261 Angle head, compl., 4220385999 Angle head, compl., 4220359596 Angle head, compl., 4250151380 Anvil, compl., 4250294990 Anvil, compl., 4250151290 Quick change chuck, 4220242264 Angle head, compl., 4220353692 Angle head, compl., 4220223896 Angle head, compl., 4224450293 Front part, compl., 4224450292 Front part, compl., 4211271391 Shaft, compl., 4210248499 Angle head, compl., 4250232880 Pulse unit, 4250232881 Pulse unit, 4250180660 Pulse unit, 4250180689 Pulse unit, 4250252081 Pulse unit, compl., 4250252080 Pulse unit, compl., 4250253983 Pulse unit, 4250253982 Pulse unit, 4250242788 Pulse unit, 4250242787 Pulse unit, 4250313692 Pulse unit, compl., 4220242263 Angle head, compl., 4220242265 Angle head-H, compl., 4220353660 Angle head-H, compl., 4224221991 Front part, compl, 4220271397 Shaft, compl., 4250180632 Pulse unit, 4250180631 Pulse unit, 3512100327 Angle head, compl., 4224250390 Angle head, compl., 4224250297 Angle head, compl., 4224250492 Angle head, compl., 4224250394 Angle head -H, compl., 4250180663 Pulse unit, 4224252390 Angle head, compl., 4224252490 Angle head, compl., 4220223864 Angle head, compl., 4210442080 Angle head, compl., 4210334693 Angle gear, compl., 3512100326 Angle head, compl., 4081008590 Service kit, 4081024890 Service kit, 4081027390 Service kit, 4081028890 Service kit, 4081204690 Service

Parts without ordering number are not delivered separately for technical reasons. The use of other than genuine Atlas Copco replacement parts may result in decreased tool performance and increased maintenance and may, at the company option, invalidate all warranties.
© Atlas Copco Industrial Technique AB

参考编号	订购号	Qty	说明	Remark / included in Service kit
200 (201-206)		1	Planetary shaft, compl.	i = 3,79 i = 3,79
201		1	Spacer	零件包含在套件中 4210356180 Planetary shaft, compl., 4210260381 Planetary shaft, compl., 4210263882 Planetary shaft, compl.
202	4210154700	3	Pin	零件包含在套件中 4210152080 Planetary gear, 4210152180 Planetary gear, 4210358892 Planetary shaft, compl., 4210250281 Planetary shaft, compl., 4210250282 Planetary shaft, compl., 4210260381 Planetary shaft, compl., 4210248481 Angle head, compl., 4210152281 Planetary gear, compl., 4210187881 Planetary gear, compl., 4210248496 Angle head, compl., 4210248497 Angle head, compl., 4210248080 Planetary shaft, compl., 4210248499 Angle head, compl., 4210187880 Planetary gear, compl., 4210152280 Planetary gear, compl.
203	4210153100	6	Washer	零件包含在套件中 4210152080 Planetary gear, 4210152180 Planetary gear, 4210250281 Planetary shaft, compl., 4210250282 Planetary shaft, compl., 4210260381 Planetary shaft, compl., 4210248481 Angle head, compl., 4210152281 Planetary gear, compl., 4210187881 Planetary gear, compl., 4210248496 Angle head, compl., 4210248497 Angle head, compl., 4210248080 Planetary shaft, compl., 4210248499 Angle head, compl., 4210445892 Planetary gear, compl., 4210445891 Planetary gear, compl., 4210187880 Planetary gear, compl., 4210152280 Planetary gear, compl.
204	4090007700	45	Bearing needle	零件包含在套件中 4081005390 Service kit, 4081005690 Service kit, 4110103181 Planetary gear, compl., 4110145780 Planetary gear, compl., 4110145782 Planetary gear, compl., 4110086581 Planetary gear, compl., 4110150482 Planetary gear, compl., 4110151782 Planetary gear, compl., 4110166680 Planetary gear, compl., 4110082580 Planetary gear, compl., 4111011880 Planetary shaft, compl., 4430042780 Planetary gear, compl., 4110155080 Planetary gear, compl., 4210213680 Planetary gear, compl., 4210212980 Planetary gear, compl., 4110086682 Planetary gear, 4110086782 Planetary gear, 4210189780 Planetary gear, compl., 4210032680 Planetary gear, 4110063280 Planetary gear, 4210214580 Planetary gear, compl., 4210214380 Planetary gear, compl., 4210356180 Planetary shaft, compl., 4210260381 Planetary shaft, compl., 4210263882 Planetary shaft, compl., 4220162488 Planetary gear, compl., 4210190081 Planetary shaft, 4210190780 Planetary gear, compl., 4210214381 Planetary shaft, compl., 4210190082 Planetary shaft, compl., 4210248080 Planetary shaft, compl., 4210057880 Planetary gear, compl., 4220019280 Planetary shaft, compl., 4210190680 Planetary gear, compl., 4210190381 Planetary shaft, compl., 4210213980 Planetary gear, compl., 4210214481 Planetary shaft, compl., 4220183490 Planetary gear, compl., 4220182890 Planetary gear, compl., 4220182891 Planetary gear, compl., 4220180995 Planetary gear, compl., 4220183492 Planetary gear, compl., 4220101091 Gear rim, compl., 4220174491 Planetary gear, compl., 4220162592 Planetary gear, compl., 4220391991 Gear unit, compl., 4220391993 Gear unit, compl., 4110107180 Planetary gear, 4110061490 Gear wheel kit, 4220183462 Gear unit, 4220183460 Gear unit, 4220183465 Gear, compl., 4220183466 Gear, compl., 4220162496 Planetary shaft, compl., 4220183467 Gear, compl., 4210445892 Planetary gear, compl., 4210445891 Planetary gear, compl., 4220100891 Planetary shaft, compl., 4082008191 Wear part kit - Gear, 4082019590 Wear part kit - Gear, 4220183463 Gear unit, 4220162497 Planetary shaft, compl. 1x6.8
205	4210247400	3	Gear wheel	零件包含在套件中 4210260381 Planetary shaft, compl., 4210248080 Planetary shaft, compl. z = 12
206		1	Planetary shaft	零件包含在套件中 4210260381 Planetary shaft, compl.

Parts without ordering number are not delivered separately for technical reasons. The use of other than genuine Atlas Copco replacement parts may result in decreased tool performance and increased maintenance and may, at the company option, invalidate all warranties.

© Atlas Copco Industrial Technique AB